ZONE220S-50 Technical Data Sheet

2-year warranty

Application

This valve is typically used on fan coil units, baseboards or other hydronic applications where fail safe operation on 2-wire control is required. This valve is suitable for use in a hydronic system with variable or constant flow.
This valve is designed to fit in compact areas where on/off or control is required using 24 VAC or 120 VAC.

Suitable Actuators

	Spring
ZONE220S-50	ZONE

Technical Data	
Fluid	chilled or hot water, up to 50% glycol
Flow characteristic	on/off
Valve Size [mm]	0.75” [20]
Pipe connector	sweat
Housing	forged brass
Housing seal	EPDM
Stem	stainless steel
Seat	EPDM
Body Pressure Rating	300 psi
Close-off pressure Δps	25 psi
Cv	5
Weight	0.66 lb [0.30 kg]
Fluid Temp Range (water)	32...212°F [0...100°C]
Leakage rate	ANSI Class III 0.1%

Dimensions (Inches [mm])

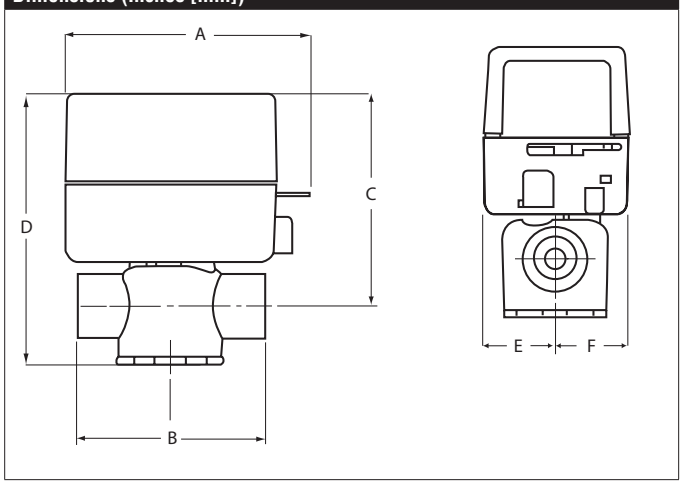

A	B	C	D	E	F
4.0” [102]	2.8” [70]	3.5” [89]	4.4” [113]	1.2” [30]	1.2” [31]

Date created, 06/15/2020 - Subject to change. © Belimo Aircontrols (USA), Inc.

ZONE24NC-S Technical Data Sheet

2

2-year warranty

Technical Data	
Power Supply	24 VAC, ±10%, 50/60 Hz
Power consumption in operation	6.5 W
Transformer sizing	7 VA (class 2 power source)
Electrical Connection	18” wire leads
Angle of rotation	90°
Position indication	Mechanically (integrated)
Manual override	hand lever
Running time fail-safe	<5 s Variable: 2.5...10 s
Ambient humidity	max. 95% r.H., non-condensing
Ambient temperature	32...104°F [0...40°C]
Storage temperature	-40...176°F [-40...80°C]
Degree of Protection	IP20, NEMA 1
Housing material	1114
Agency Listing	CE, cULus
Noise level, motor	35 dB(A)
Noise level, fail-safe	35 dB(A)
Servicing	maintenance-free
Quality Standard	ISO 9001
Weight	0.88 lb [0.40 kg]
Auxiliary switch	1 x SPST, 0.4 A resistive (0.4 A inductive) @ AC 24 V,

Date created, 05/23/2020 - Subject to change. © Belimo Aircontrols (USA), Inc.

Wiring Diagrams

INSTALLATION NOTES

Meets cULus requirements without the need of an electrical ground connection.

86 One built-in auxiliary switch, 1x SPST 0.4A @ 24 VAC (resistive and inductive loads).

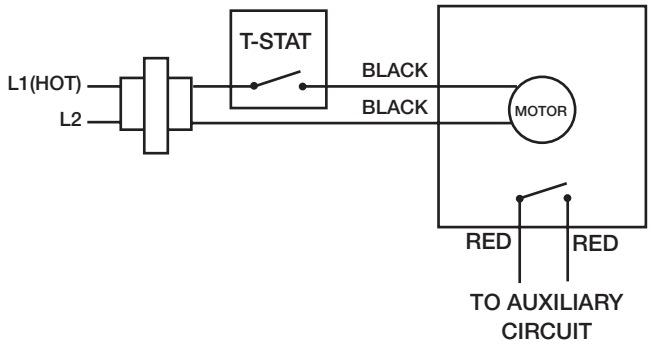

Built-in Auxiliary Switch (optional) (only on -S models)

Date created, 05/23/2020 - Subject to change. © Belimo Aircontrols (USA), Inc.